accucold

FS407L7ADA

32.5" x 19.25" x 21.38" (H x W x D)

Commercially listed ADA Compliant 20" wide counter height all-freezer, -20º C capable with a lock and white exterior

Highlights:

ETL-S listed for commercial use

32" height for use in ADA compliant settings

Slim 20" width is ideal for any setting

Product Features:

Commercially listed	ETL-S listed to NSF standards for commercial use
Slim 20" width	2.8 capacity inside a slim footprint
ADA compliant	32" high meets ADA guidelines
Fully finished white cabinet	Allows the unit to be used freestanding
Factory installed lock	Top-mounted for convenient security
Reversible door	Keep your options flexible with a reversible door that is easy to switch when your arrangement changes
Hospital grade cord with 'green dot' plug	Secure three-pronged cord for added unit safety
Manual defrost	Efficient performance with reliable temperature stability
-20º capable	Low temperature capability ideal for certain sensitive items

SUMMIT APPLIANCE DIVISION, FELIX STORCH, INC. | ISO 9001:2015 Certified
770 Garrison Avenue Bronx, NY 10474 USA **TEL** 718-893-3900 **FAX** 844-478-8799 info@summitappliance.com **www.summitappliance.com**

accucold

FS407L7ADA Specifications:
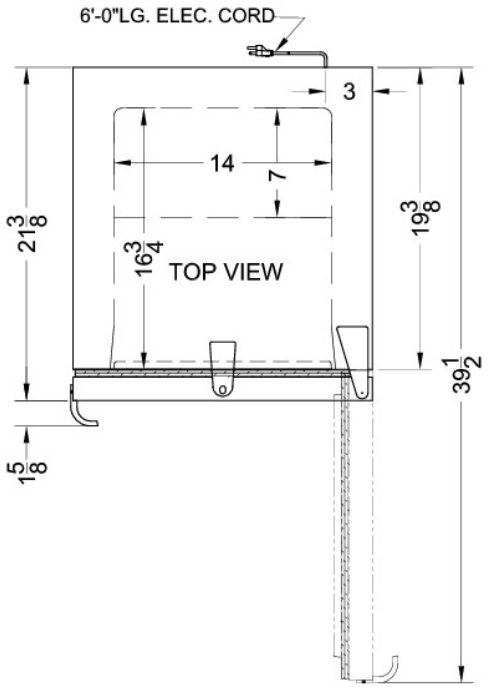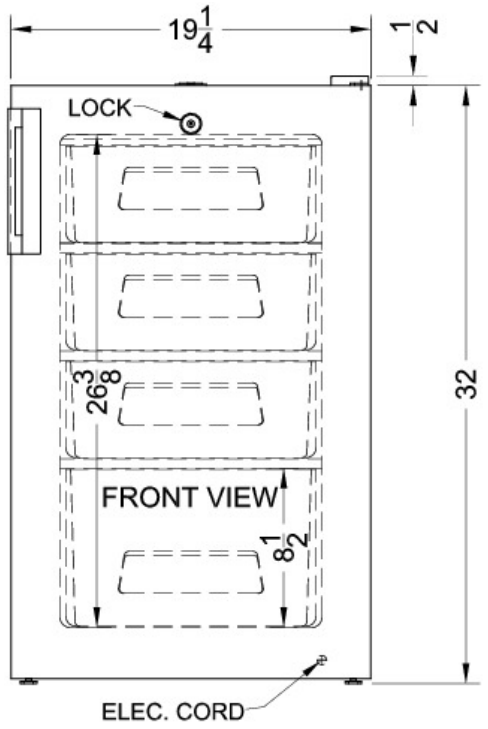
Overview	
Height of Cabinet	32.0" (81 cm)
Height to Hinge Cap	32.5" (83 cm)
Width	19.25" (49 cm)
Depth	21.38" (54 cm)
Depth with Handle	23.0" (58 cm)
Depth with door at 90°	39.5" (100 cm)
Capacity	2.8 cu.ft. (79 L)
Defrost Type	Manual
Door	White
Cabinet	White
US Electrical Safety	ETL
Canadian Electrical Safety	ETL-C
Sanitation	ETL-S
Amps	1.6
Voltage/Frequency	115 V AC/60 Hz
Weight	64.0 lbs. (29 kg)
Shipping Weight	67.0 lbs. (30 kg)
Parts & Labor Warranty	1 Year
Compressor Warranty	5 Years
UPC	761101029443
Freezer	
Door Swing	RHD
Reversible	Yes
Interior Height	26.38" (67 cm)
Interior Width	14.0" (36 cm)
Interior Depth	16.75" (43 cm)
Thermostat Type	Dial
Refrigerant Type	R134a
Refrigerant Amount	3.0 oz.
High Side PSI	210.0
Low Side PSI	105.0
Level Legs	2
Interior Drawers	Yes
Drawers Qty	4